Havendale/Auburndale System Architecture

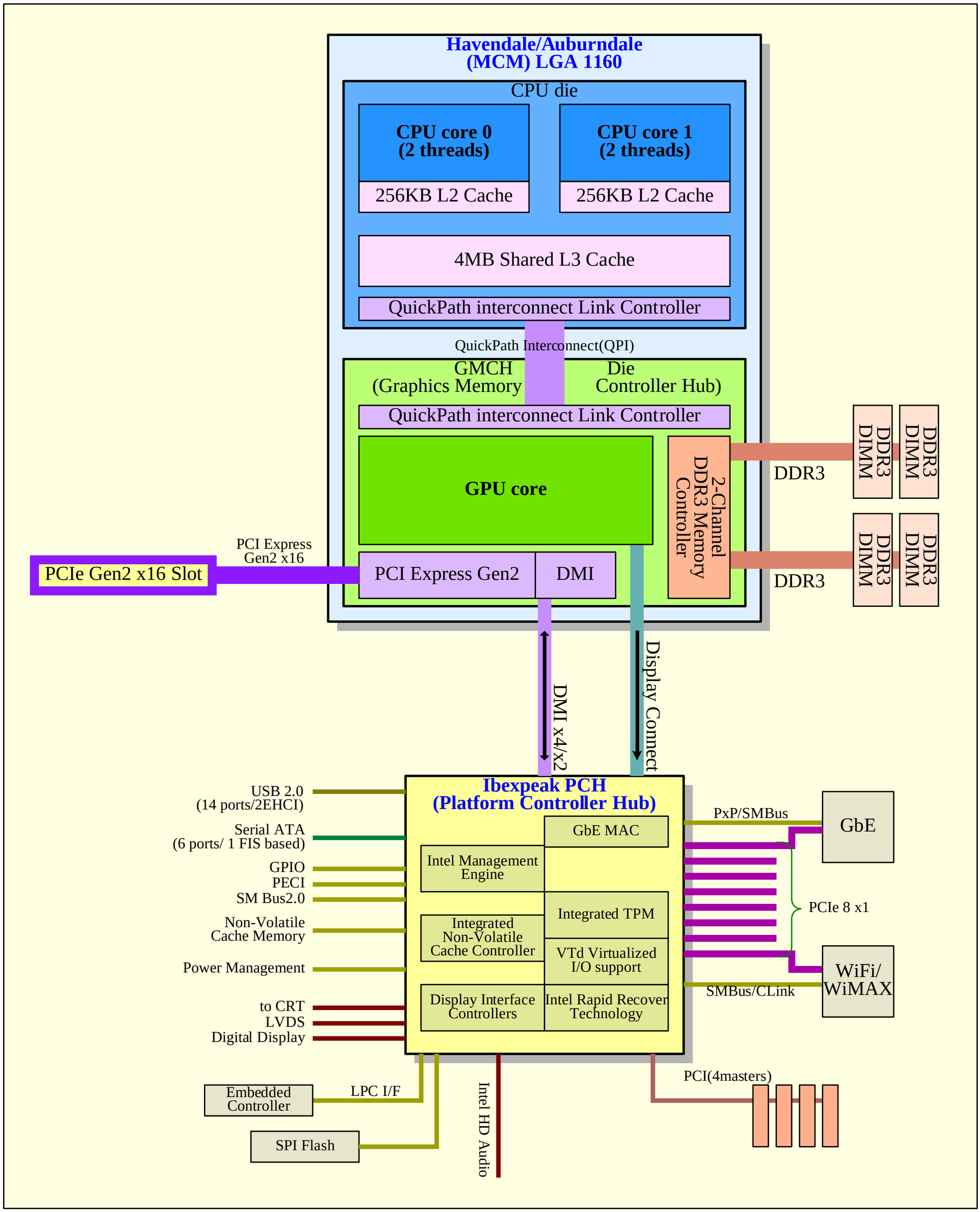

Copyright (c) 2008 Hiroshige Goto All rights reserved.